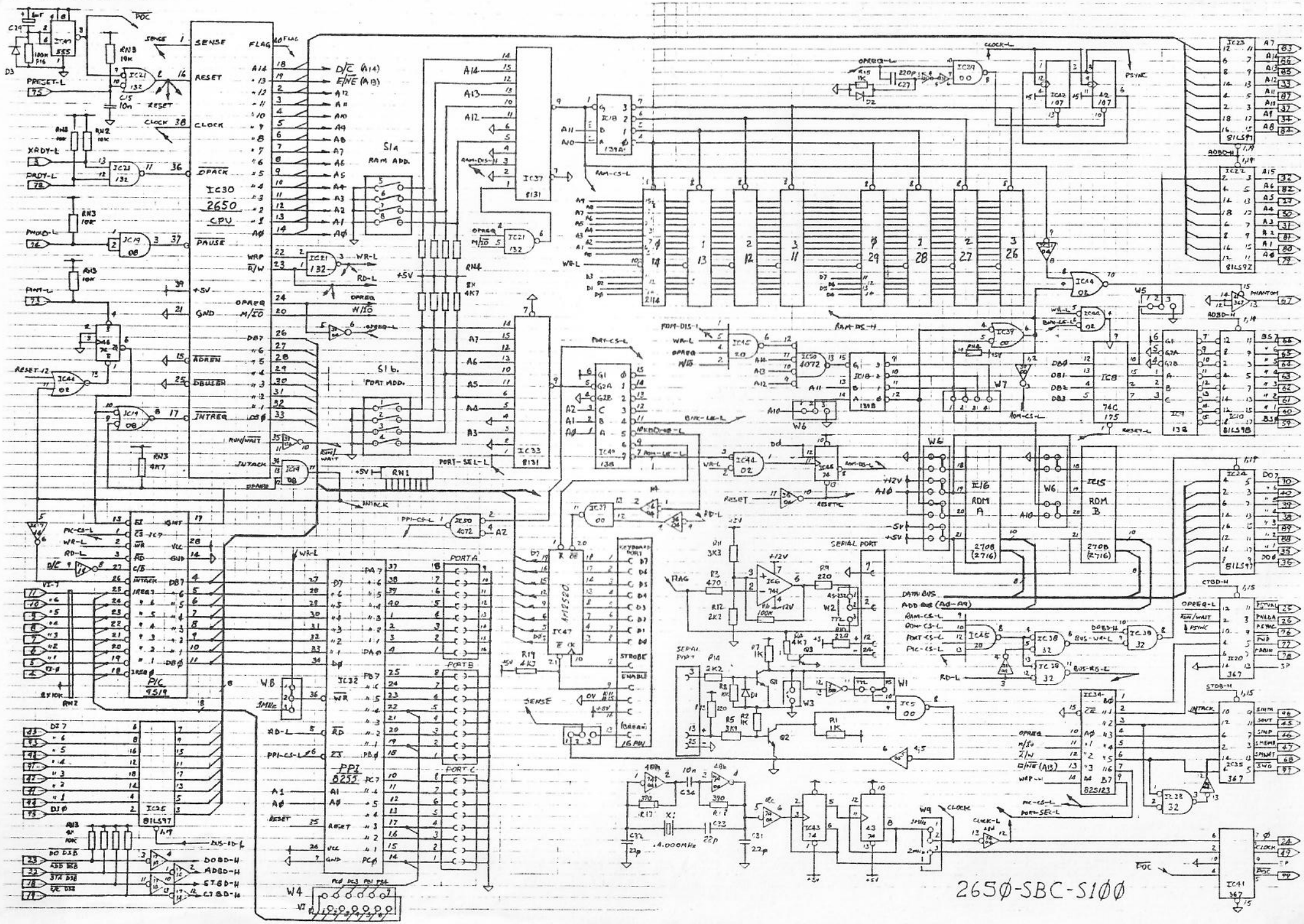
IC30
2650
CPU
SENSE
RESET
CLOCK
DPACK
PAUSE
ADREN
DBUSEN
INTREQ
RUN/WAIT
INTACK
FLAG
S1A
RAM ADD.
S1b.
PORT ADD.
IC37
8131
IC33
8131
IC18
139A
IC40
138
IC45
4072
IC50
4072
IC47
AM9520
KEYBOARD PORT
STROBE
ENABLE
IC32
PPI
8255
PORT A
PORT B
PORT C
IC25
81LS97
IC23
81LS97
IC22
81LS98
IC24
81LS97
IC16
RDM
A
2708
(2716)
IC15
RDM
B
2708
(2716)
IC8
74C
175
IC9
138
IC10
81LS98
IC34
8251A
IC35
367
IC41
367
IC43
74
SERIAL PORT
DATA BUS
ADD BUS (A0-A9)
2650-SBC-S100